DS-1602ZJ

Wall Mount Bracket Indoor/Outdoor

Features:

- Aluminum alloy material with surface spray treatment
- General design for indoor/outdoor
- Better water proof design
- With safety rope, the assembling is safer and more convenient

Dimension:

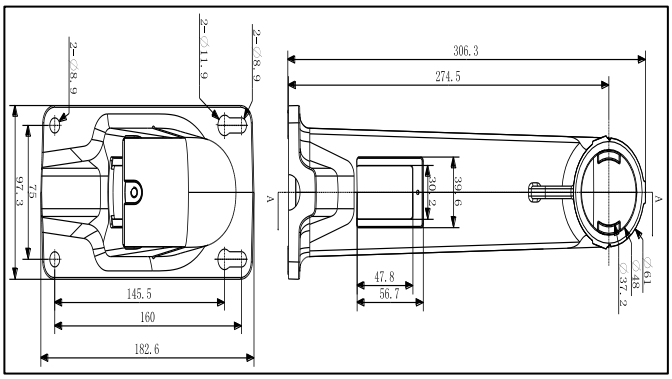

Note: The actual bracket may vary from the picture above.

Order model:

DS-1602ZJ

Parameters:

Model / Parameter	DS-1602ZJ
	Wall Mount Bracket In/Outdoor
Color	Hik white
Feature	Suitable for speed dome pendent mounting
Material	Aluminum alloy
Dimension	97X182X305mm
Weight	1050g

Notice:

- The bracket should be installed on the flat surface of a wall
- The wall must be capable of supporting more than 3 times the total capacity of the camera and the bracket.